LEO CONTEMPORARY STYLE CHROME FINISH RAIN AND WATERFALL SHOWER HEAD WITH 3 WAY MIXER AND HANDHELD SHOWER INSTALLATION INSTRUCTIONS

PRIOR TO INSTALLATION

Please read installation instructions below. All plumbing should be installed in accordance with applicable building codes and regulations.

Unpack and inspect the items for any shipping damages. If you find damages, do not install.

All products must be installed by a professional and certified plumber otherwise warranty may be voided.

POSSIBLE TOOLS REQUIRED*

Plumbers Tape

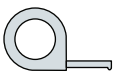

Tape Measure

Level

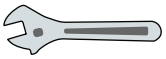

Adjustable Wrench

Hex Wrench

Thread Sealant

Drill

Pencil or Marker

Screwdriver

*not included

bathselect.com
Customer Service: 800-500-9895

Shower Head Installations Instruction

Step 1:

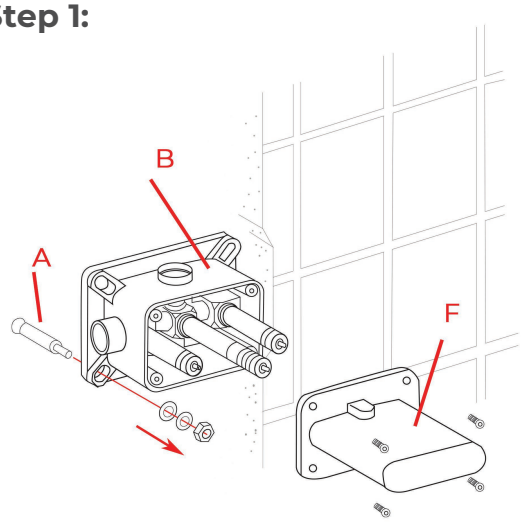

Remove the protective cover (F). Mark the positions and drill holes to suit the anchors (A). Install the anchors (A) and fix the rough-in valve (B) into the wall with screws. Use a level to ensure that the rough-in valve (B) is straight and level. (Important: Flush the water supply to remove any dirt and debris before installing the valve body).

Step 2:

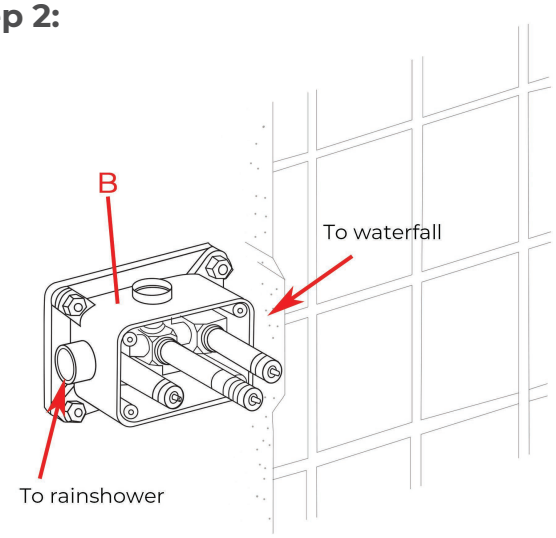

Wrap Teflon tape around the pipe threads and connect water supply lines and in-wall pipes (not included) as desired to the rough-in valve (B). Turn on the water supply and open the cartridge to check for leakage. Then put on the protective cover and finish the wall surrounding the valve. (Note: Test the water pressure after the pipe connections have been made and before the finished wall material is installed).

Step 3:

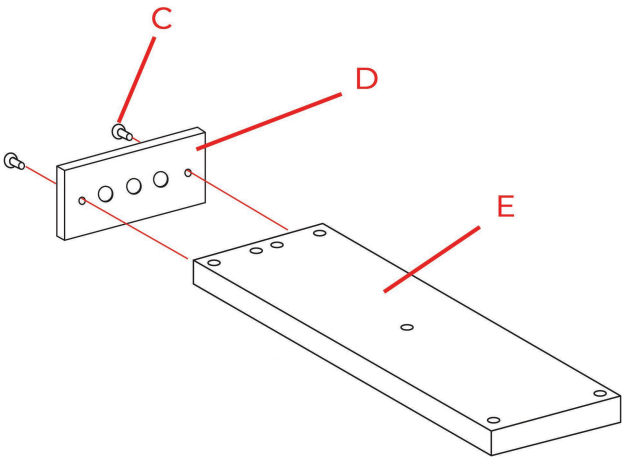

Fix the escutcheon (D) to the showerhead (E) with screws (C).

Step 4:

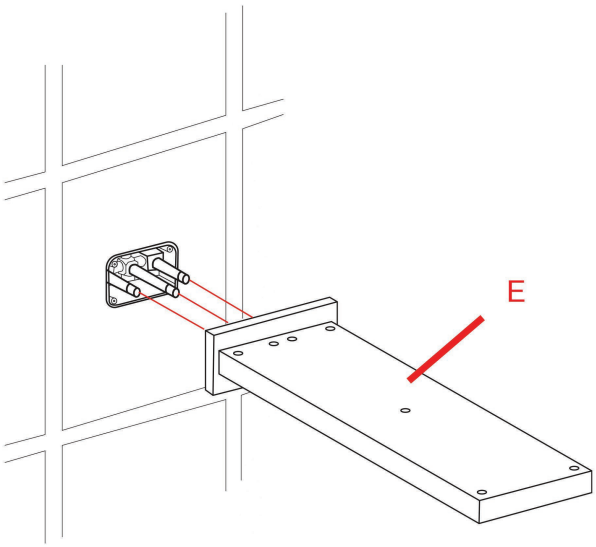

Remove the protective cover when the finished wall is completed. Then, install the showerhead (E) and press it against the finished wall.

Step 5:

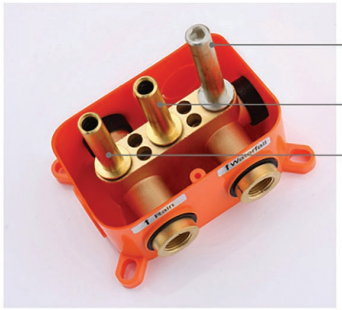

Support role ,strong safe

Rainfall outlet role

Rain shower outlet role

- Big water flow and confortable spay, Elegant design and save space of shower room

The installation of concealed plastic box
in right way

The installation of concealed plastic box
in wrong way

Mixer Installations Instructions

Step 1

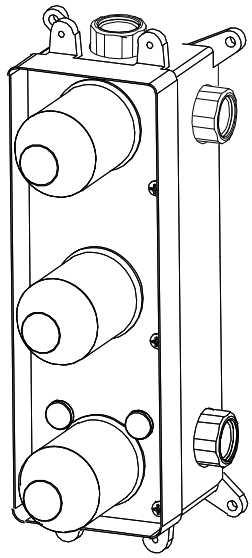

Step 2

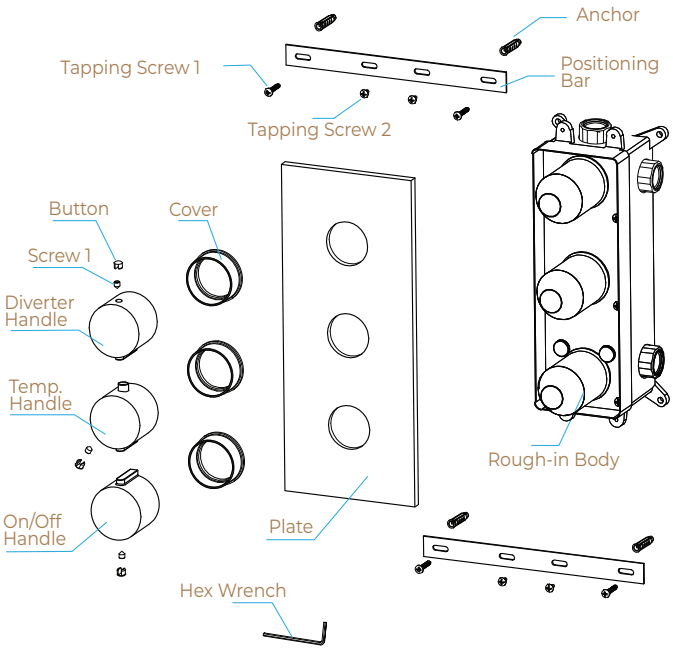

Step 3 (Connection)

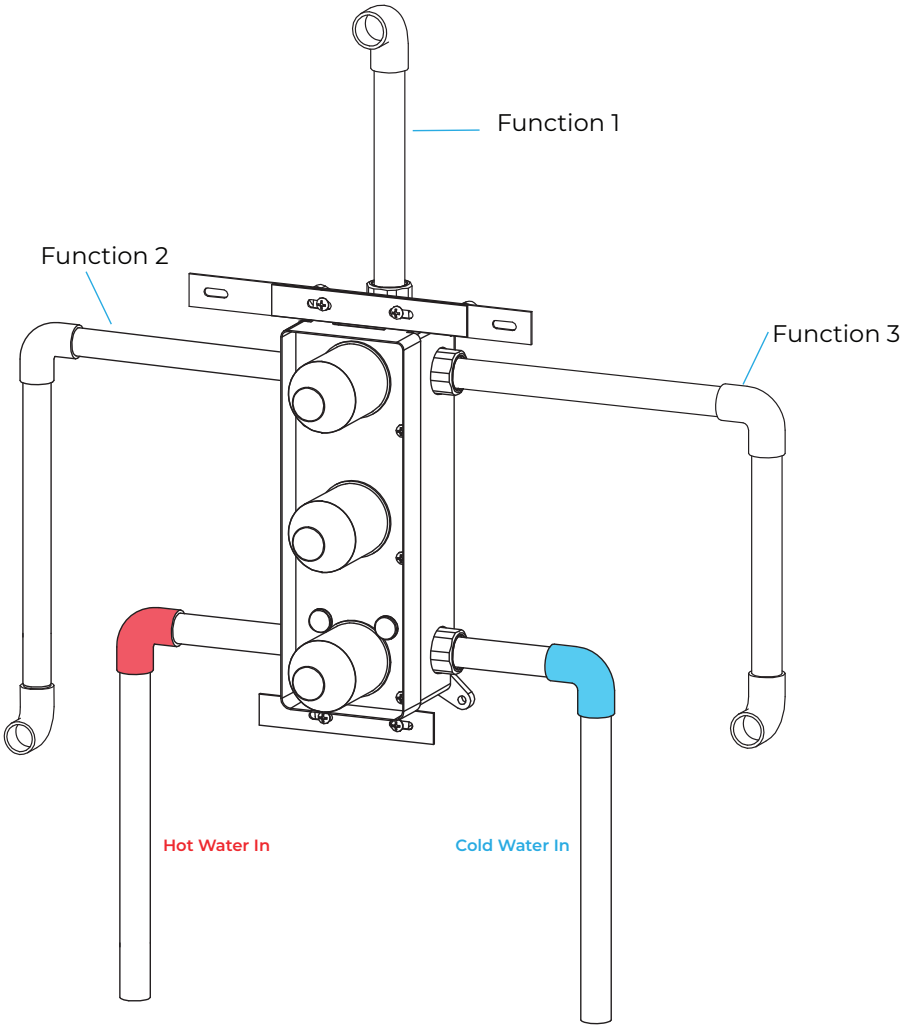

Hot water

Cold water

Hand-Held Shower Installations Instructions

Step 1

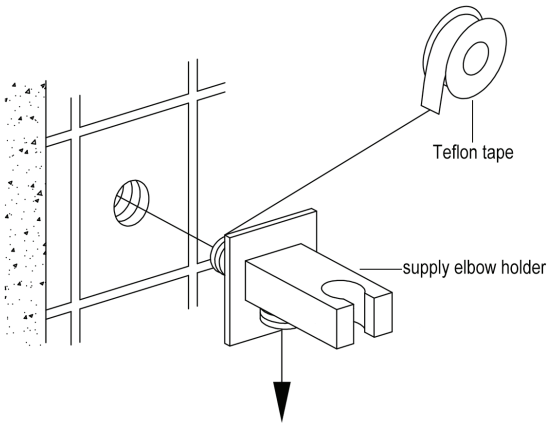

Step 2

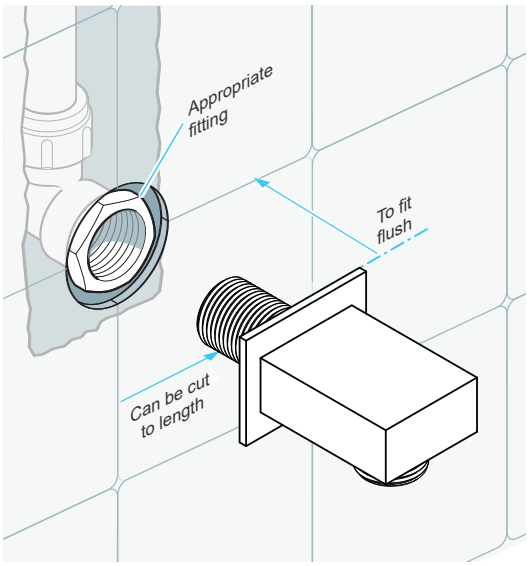

Step 3

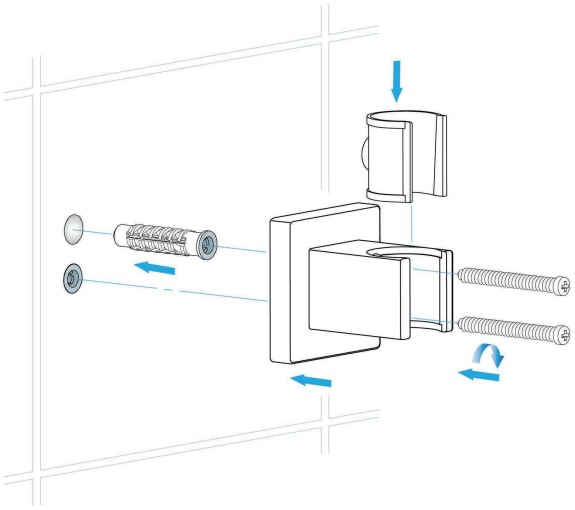

Step 4

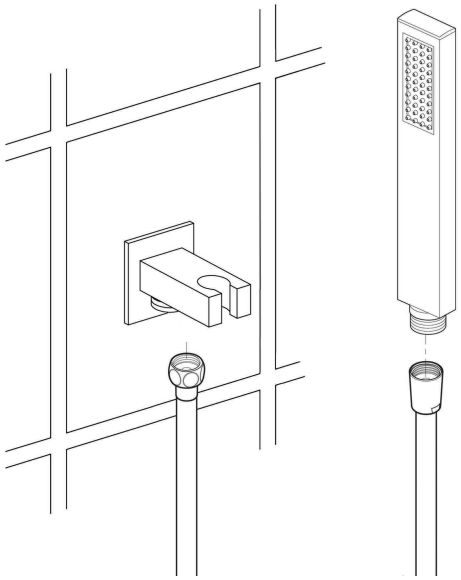

Hand Shower Outlet Installation

• Complete the outlet pipework ensuring it ends in an appropriate 15mm x 1/2" BSP female thread elbow.
Note: This fitting is not supplied as variations in installations require the selection of a suitable solder or compression fitting.

• Install the 'Wall Outlet', thread long male 1/2" BSP into the appropriate female fitting using PTFE tape to give a watertight joint.
Note: The thread can be cut to size if required. Make sure that all debris is removed from the connector and the section that has been cut is dressed correctly, before installation.

The minimum required water pressure is 0.05 MPa (0.5 bar).
Flow rate 2.5 GPM (9.5 LPM).

General Information

All products manufactured and supplied by BathSelect are safe and comply to legislative requirements. Providing they are installed correctly and receive regular maintenance in accordance with these instructions your user experience will not be affected

Care & Cleaning
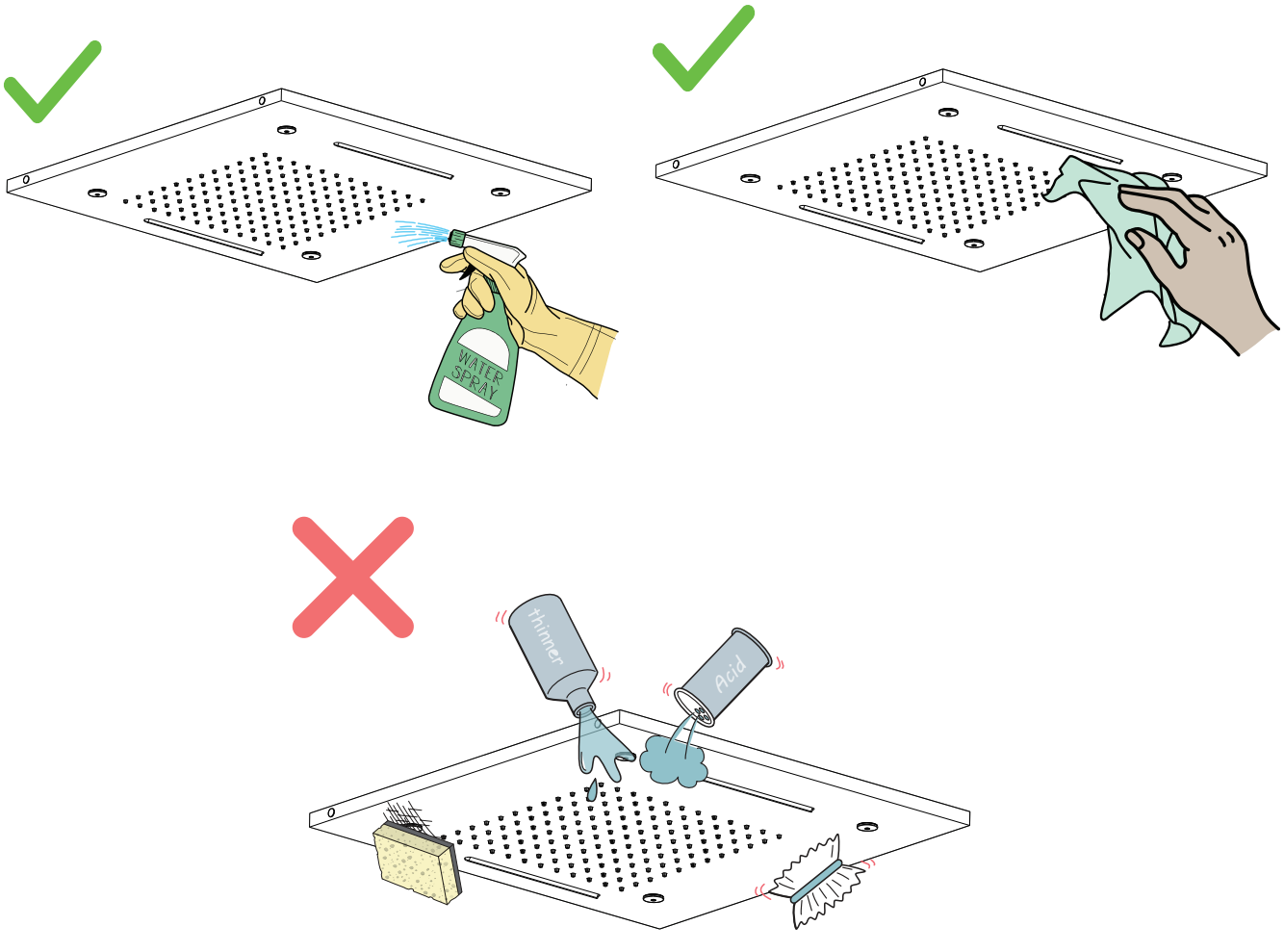
1. The product can be cleaned with warm water, a mild soap and a clean soft cloth.
2. Clean progressively and gently.
3. It is not required to use any abrasive cleaning pads, wire wool or cloths to clean the product.
4. Avoid a vigorous cleaning action, as this could contribute to denaturing and dulling
5. Abrasive or strong cleaning products containing ammonia, bleaches, alcohol, dyes, acids (hydrochloric, formic, phosphorus, chlorine or acetic) will be not be affected.
6. If using a spray cleaner, apply the cleaning agent onto a soft cloth, never directly spray onto the product as the cleaner may enter gaps and openings and cause damage. Do not allow the cleaner to remain on the product for a period of time. After cleaning, rinse thoroughly with clean water.