BRAVAT WALL MOUNTED ROUND SHOWER SET WITH VALVE MIXER 3-WAY CONCEALED AND BODY JETS INSTALLATION INSTRUCTIONS

PRIOR TO INSTALLATION

Please read installation instructions below. All plumbing should be installed in accordance with applicable building codes and regulations.

Unpack and inspect the items for any shipping damages. If you find damages, do not install.

All products must be installed by a professional and certified plumber otherwise warranty may be voided.

POSSIBLE TOOLS REQUIRED*

Plumbers Tape

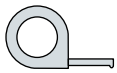
Tape Measure

Level

Adjustable Wrench

Hex Wrench

Thread Sealant

Drill

Pencil or Marker

Screwdriver

*not included

Shower Head Installations Instruction

Step 1:

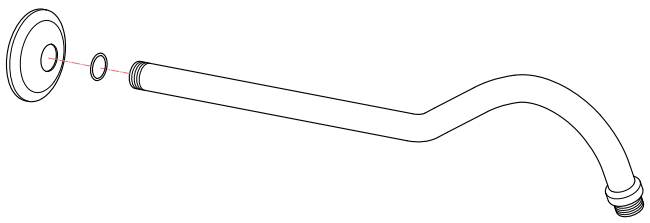

Step 2:

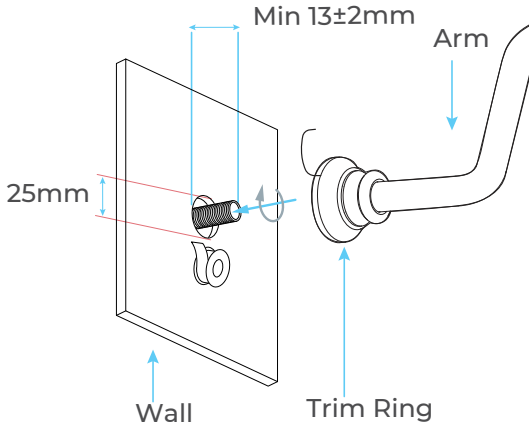

Slide trim ring onto the appropriate end of the arm. Ensure that a minimum of 13±2mm of 1/2" connection thread protrudes past the finished wall. Simply screw the arm onto the connection. Correct water proofing must be applied.

Step 3:

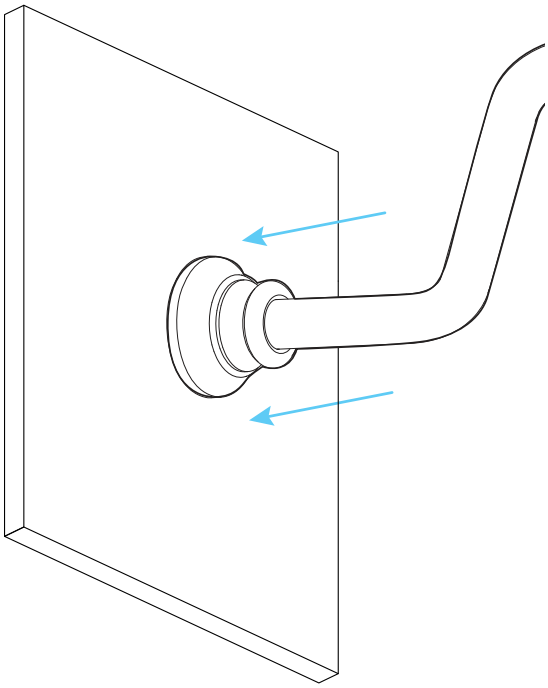

Position the arm vertically and push trim ring into place. Use wrenching flats to tighten.
DO NOT USE ARM TO LEVER

Step 4:

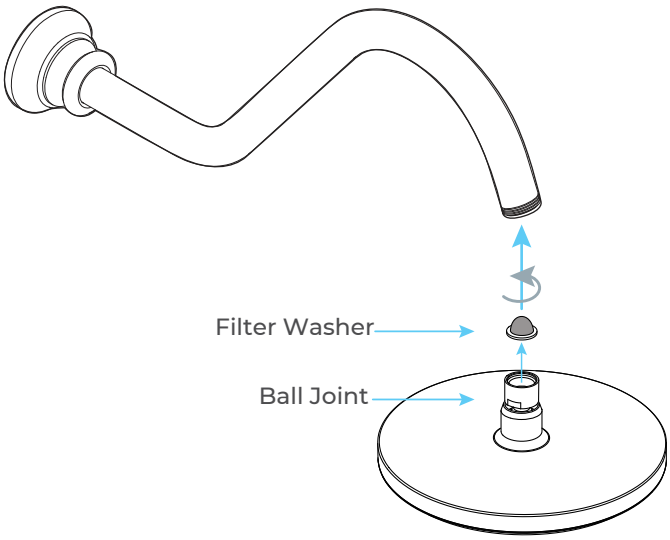

Remove the protective cap from the showerhead ball joint and screw the unit onto the overhead arm ensuring the filter washer is in place.

Hand Shower Installations Instruction

Step 1:

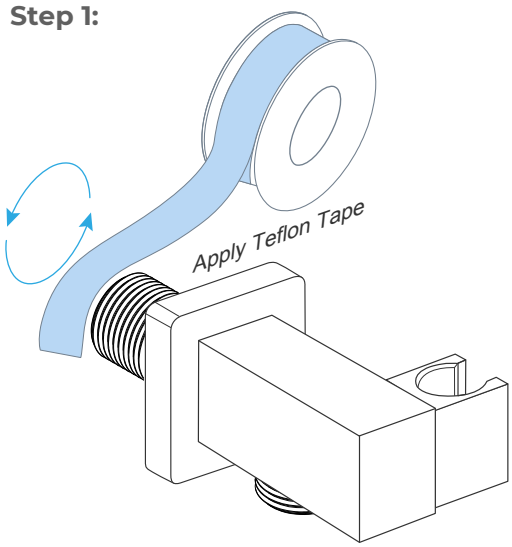

Step 2:

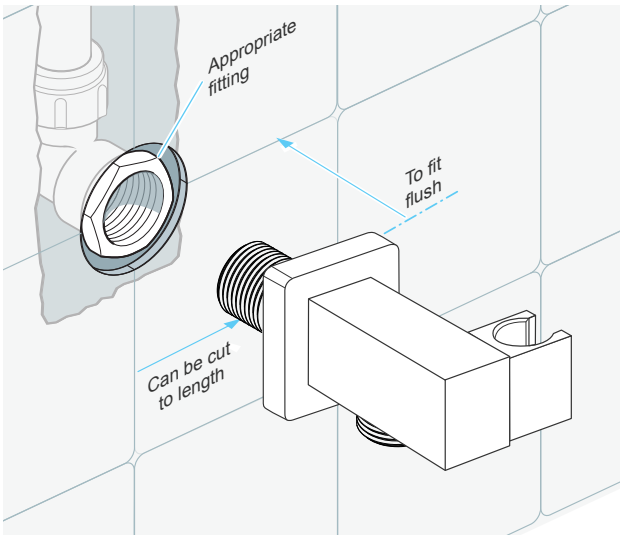

Step 3:

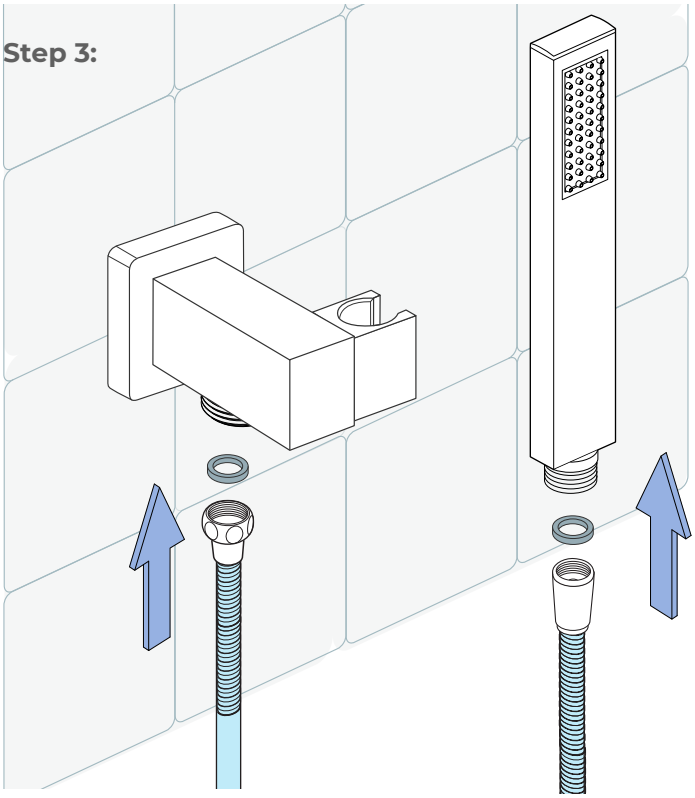

Step 4:

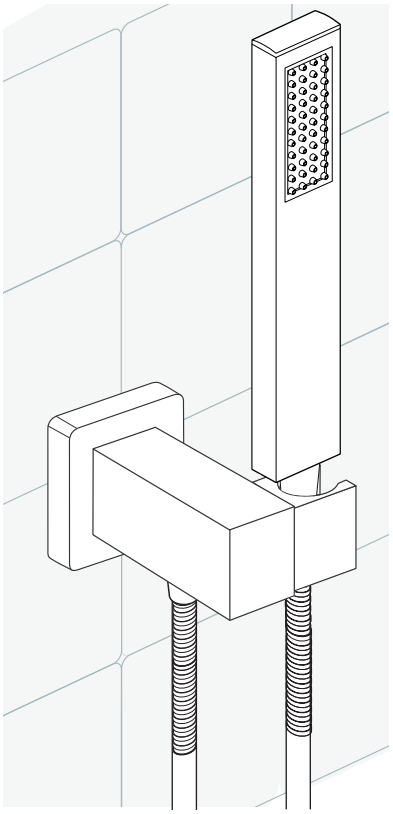

Hand Shower Outlet Installation

• Complete the outlet pipework ensuring it ends in an appropriate 15mm x 1/2" BSP female thread elbow.
Note: This fitting is not supplied as variations in installations require the selection of a suitable solder or compression fitting.

• Install the 'Wall Outlet', thread long male 1/2" BSP into the appropriate female fitting using PTFE tape to give a watertight joint.
Note: The thread can be cut to size if required. Make sure that all debris is removed from the connector and the section that has been cut is dressed correctly, before installation.

Body Jets Spray Installations Instruction

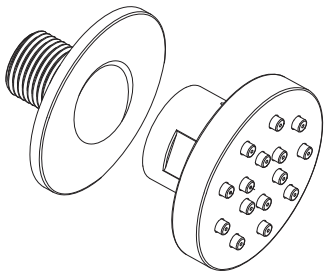

Step 1: Attach the escutcheon to the body spray.

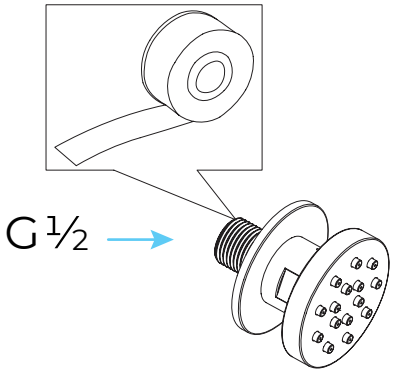

Step 2: Apply teflon tape to threaded tail pipe of the body spray

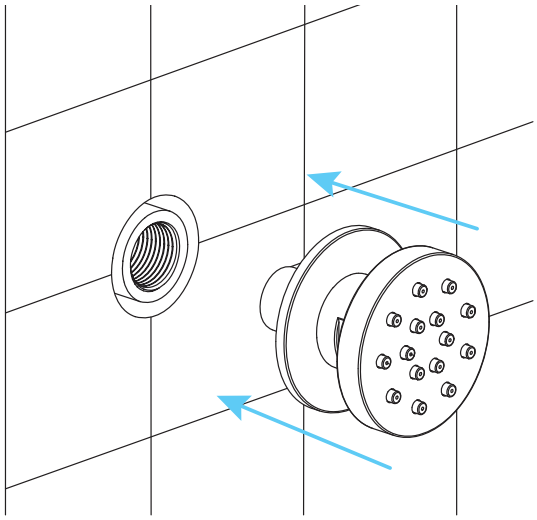

Step 3: Press the escutcheon against the finished wall

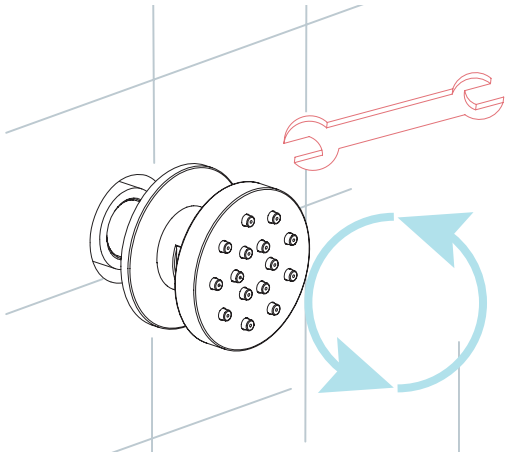

Step 4: Screw the Body spray tightly into the female of water Supply

Pressure Balancing Loop:

- If installing bodysprays in a bank of 3 or fewer, a pressure balancing loop is not necessary.
- If installing bodysprays in a bank of 4 or greater, a pressure balancing loop must be used to keep the pressure even between the bodysprays.

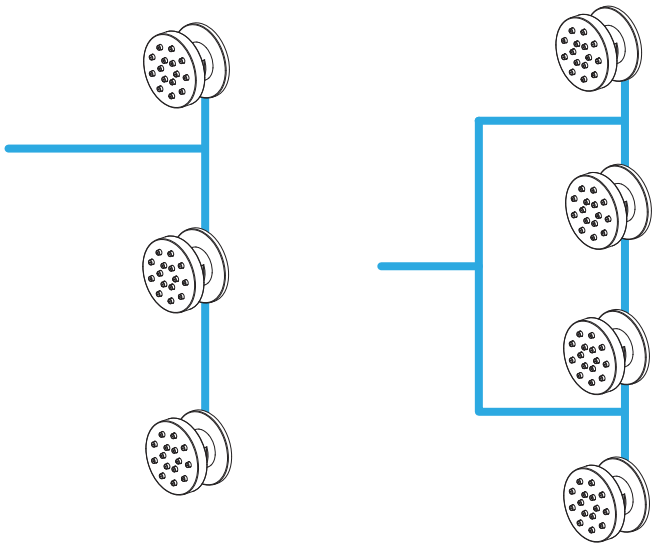

Mixer Installations Instructions

Step 1

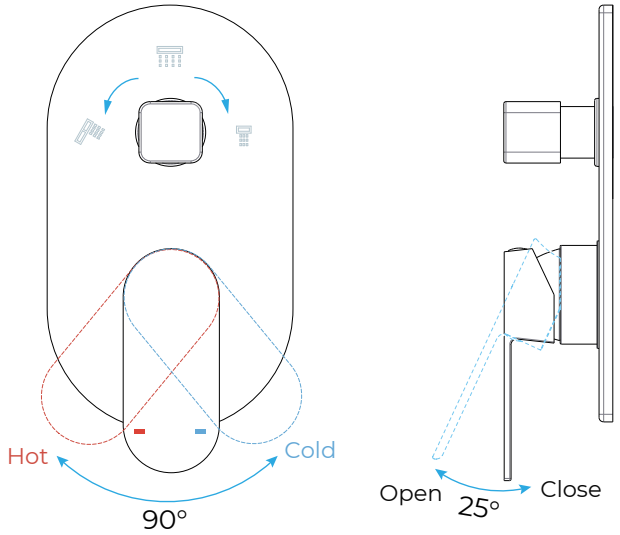

Step 2

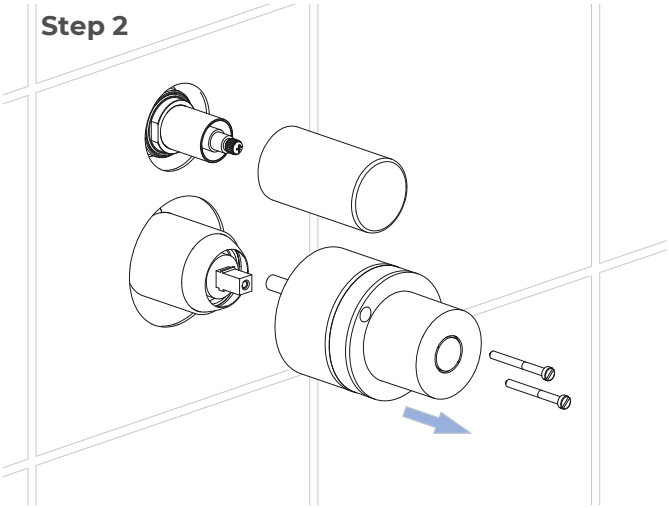

Step 3

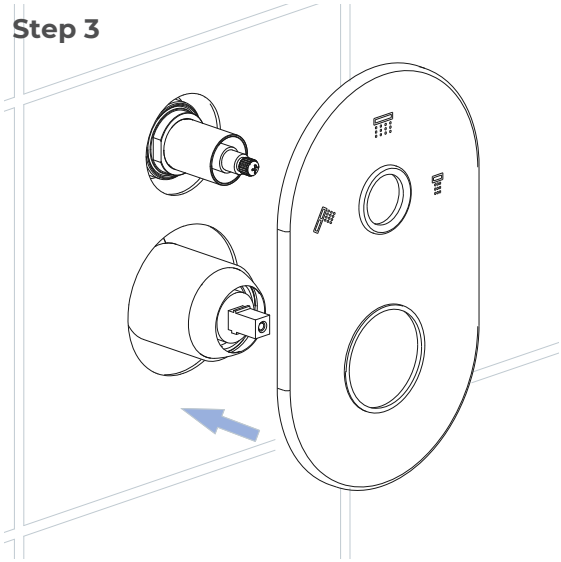

Step 4

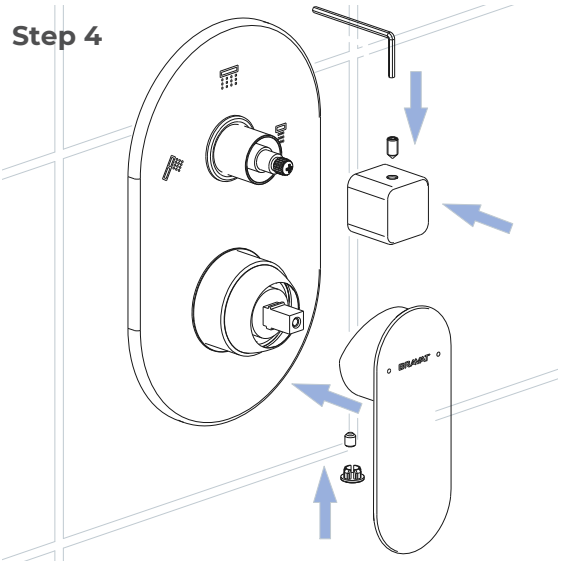

Step 5

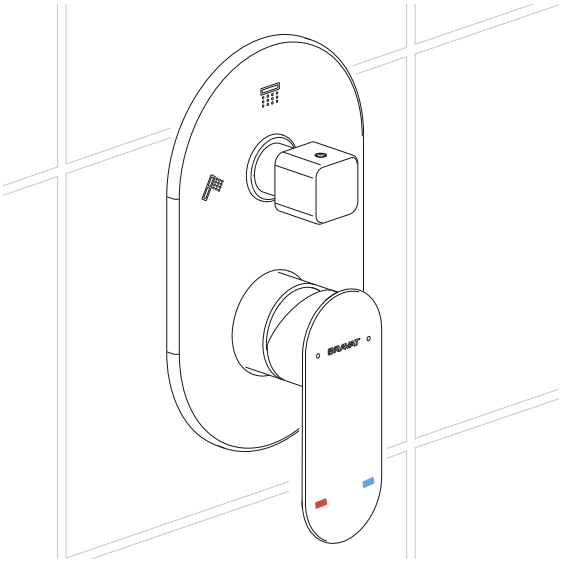

Connections

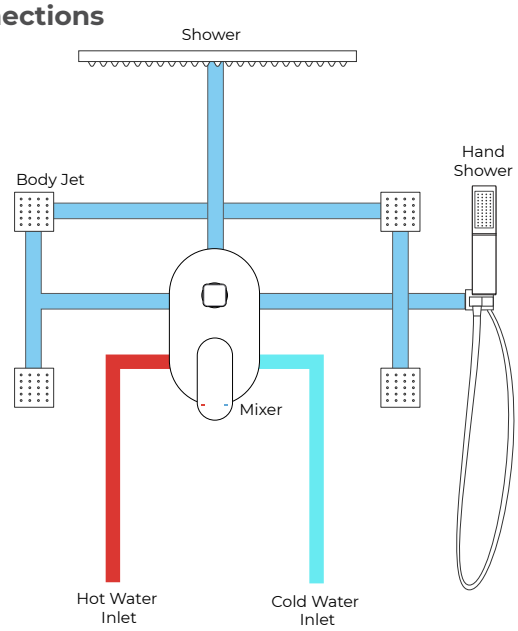

General Information

All products manufactured and supplied by BathSelect are safe and comply to legislative requirements. Providing they are installed correctly and receive regular maintenance in accordance with these instructions your user experience will not be affected.

Care & Cleaning

1. The product can be cleaned with warm water, a mild soap and a clean soft cloth.

2. Clean progressively and gently.

3. It is not required to use any abrasive cleaning pads, wire wool or cloths to clean the product.

4. Avoid a vigorous cleaning action, as this could contribute to denaturing and dulling

5.Abrasive or strong cleaning products containing ammonia, bleaches, alcohol, dyes, acids (hydrochloric, formic, phosphorus, chlorine or acetic) will be not be affected.
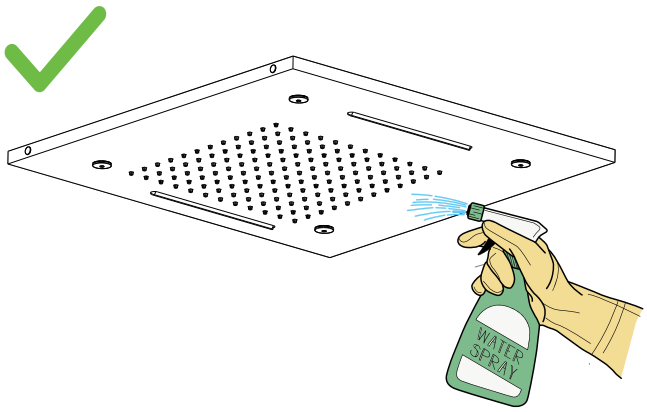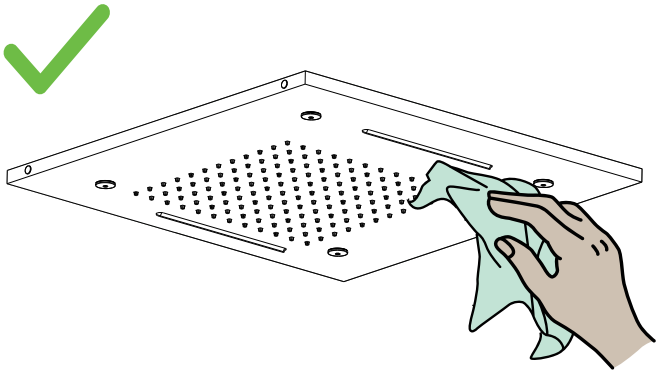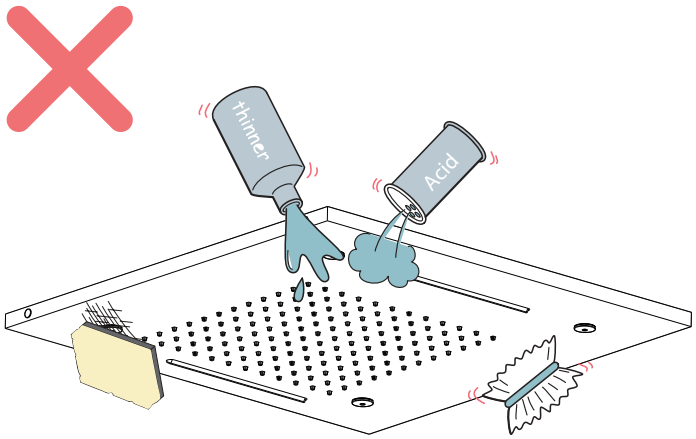
6. If using a spray cleaner, apply the cleaning agent onto a soft cloth, never directly spray onto the product as the cleaner may enter gaps and openings and cause damage. Do not allow the cleaner to remain on the product for a period of time. After cleaning, rinse thoroughly with clean water.