BATHSELECT LUXURY RAINFALL BATHROOM LED LIGHT CEILING 5 FUNCTIONS SHOWER SET INSTALLATION INSTRUCTIONS

PRIOR TO INSTALLATION

Please read installation instructions below. All plumbing should be installed in accordance with applicable building codes and regulations.

Unpack and inspect the items for any shipping damages. If you find damages, do not install.

All products must be installed by a professional and certified plumber otherwise warranty may be voided.

POSSIBLE TOOLS REQUIRED*

Plumbers Tape

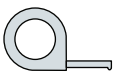

Tape Measure

Level

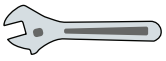

Adjustable Wrench

Hex Wrench

Thread Sealant

Drill

Pencil or Marker

Screwdriver

*not included

Shower Head Installations Instruction

Step 1:

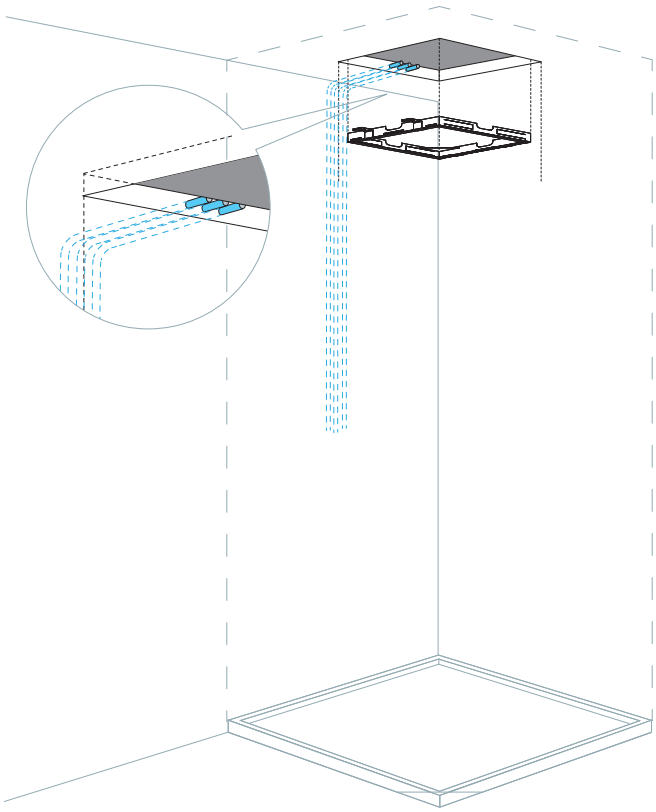

Step 2:

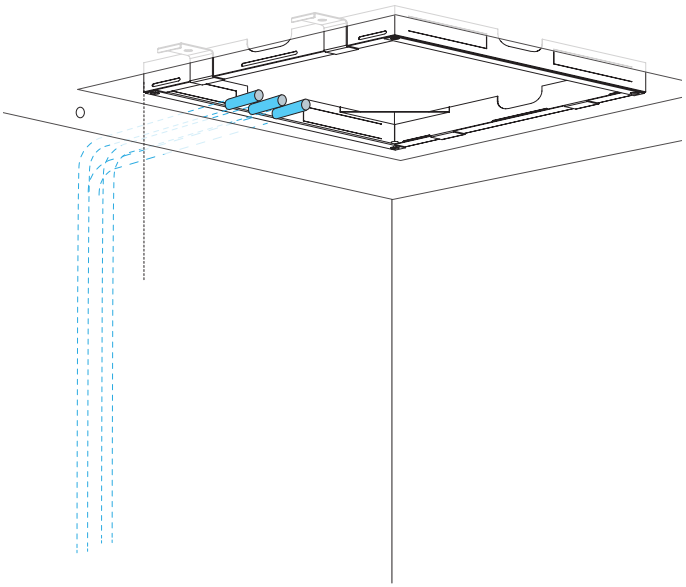

Step 3:

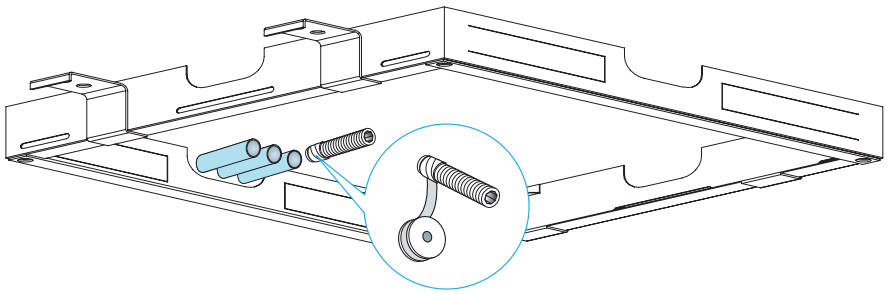

Step 4:

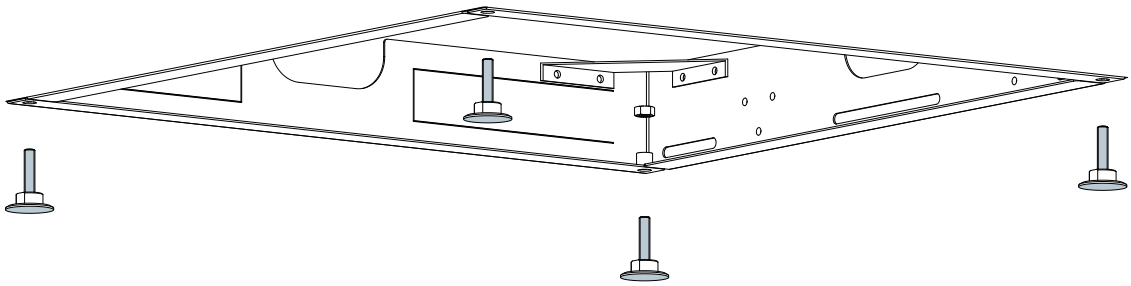

Step 5:

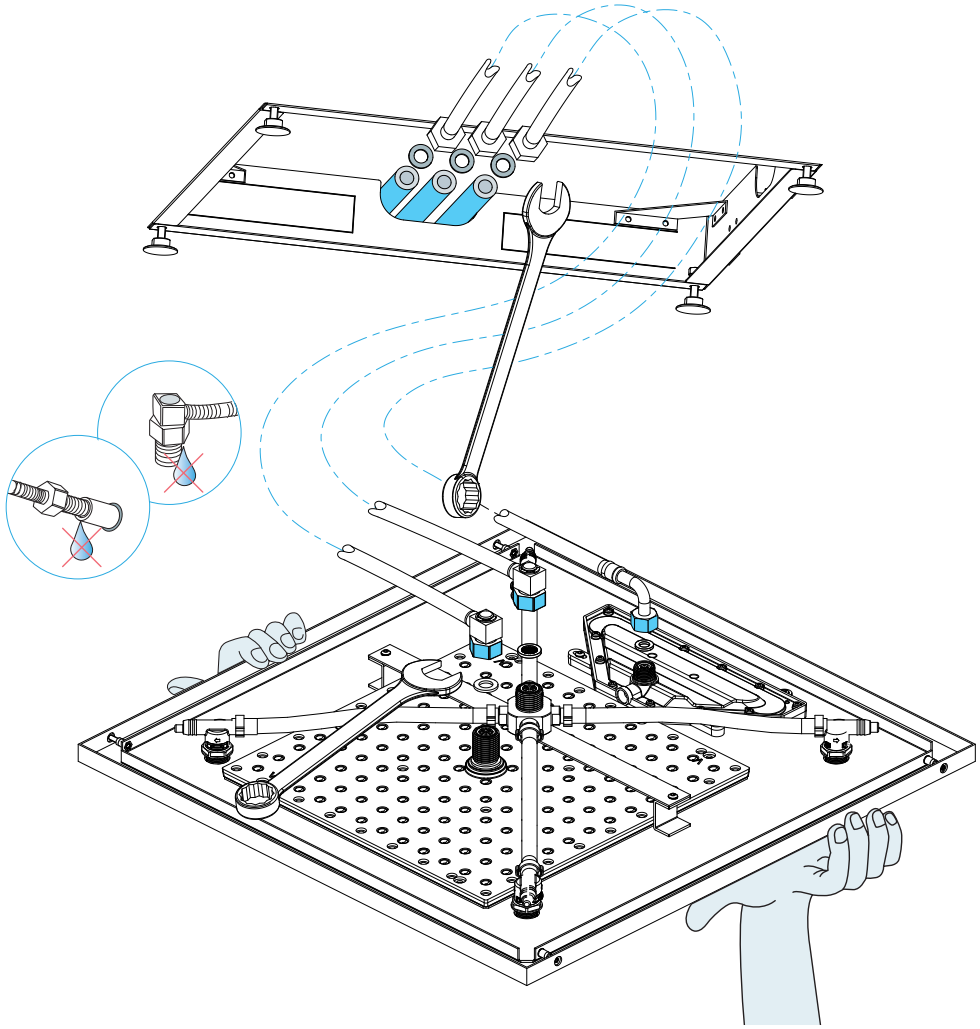

Step 6:

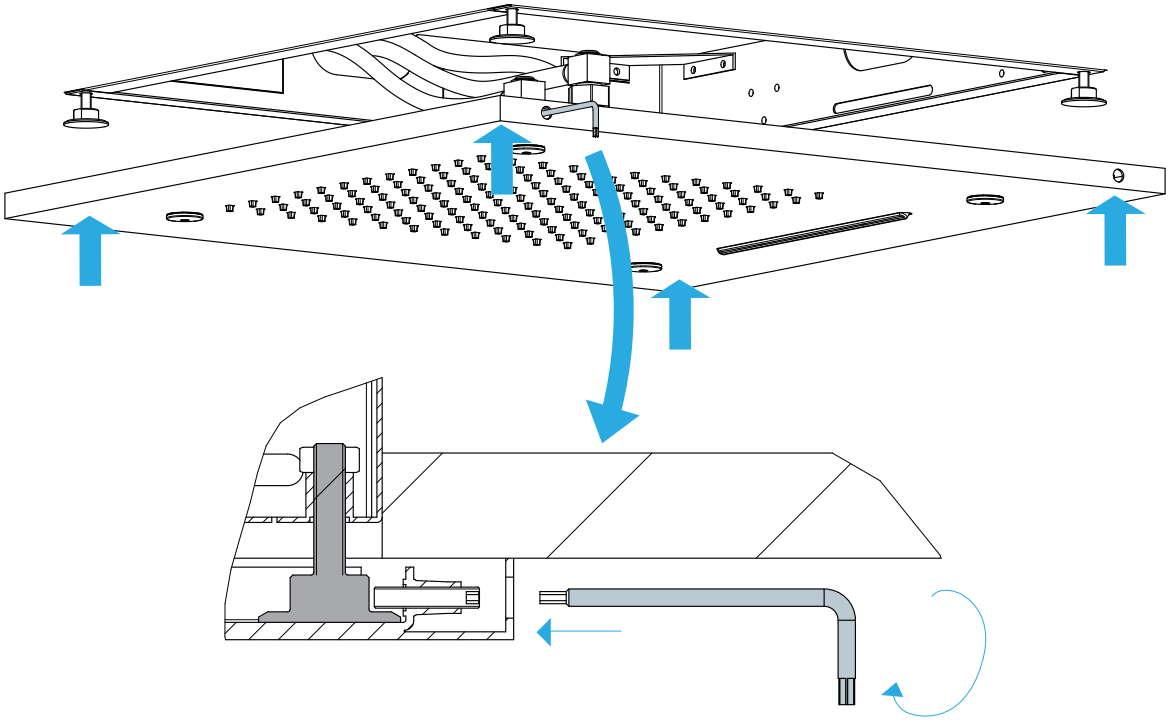

Step 7:

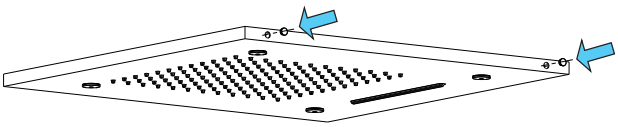

Step 8:

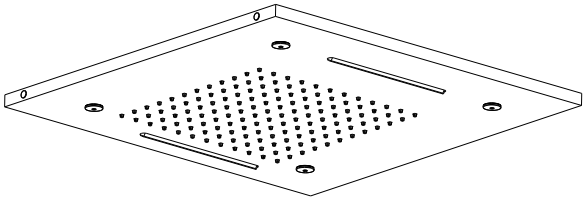

Step 9:

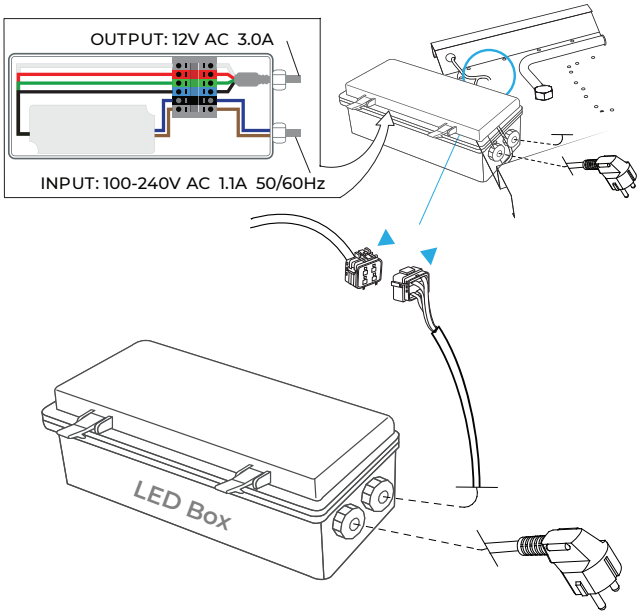

Step 10:

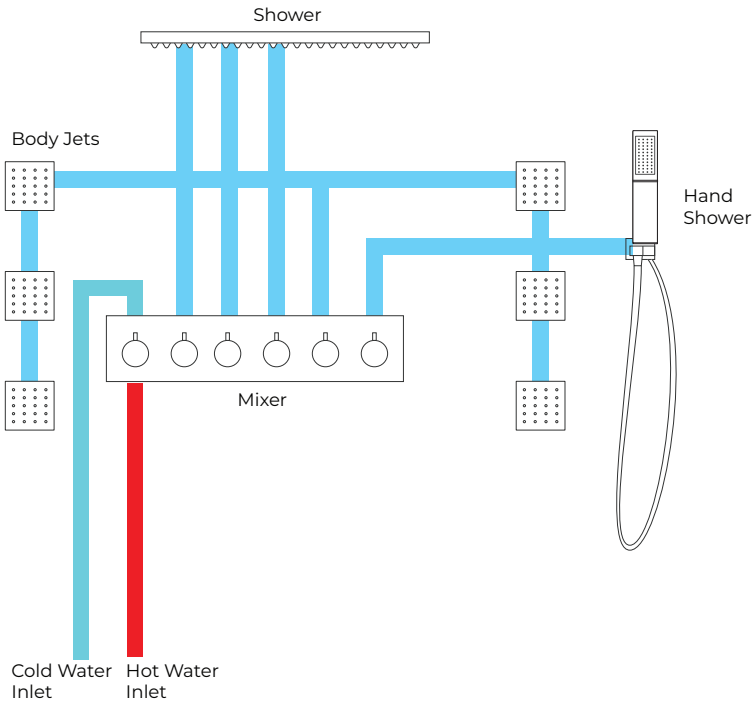

Mixer Installations Instructions

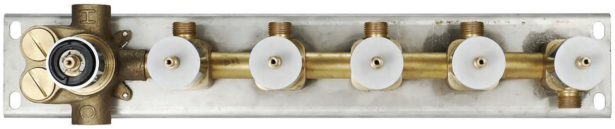

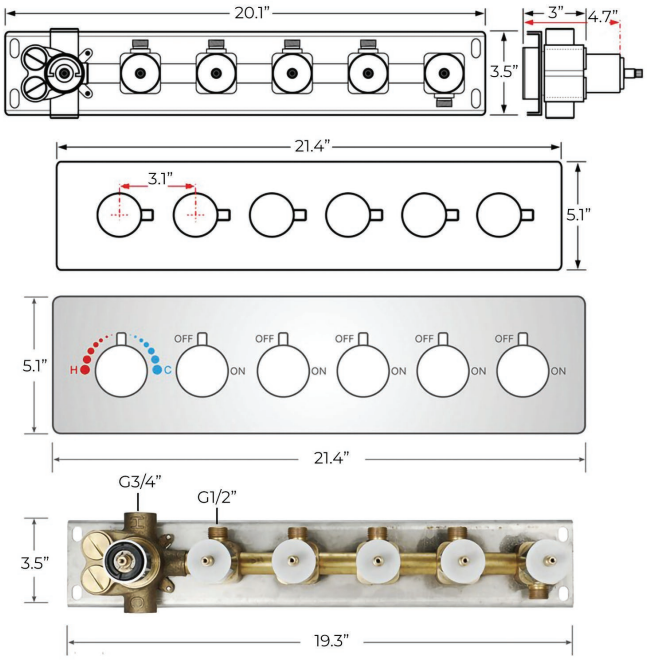

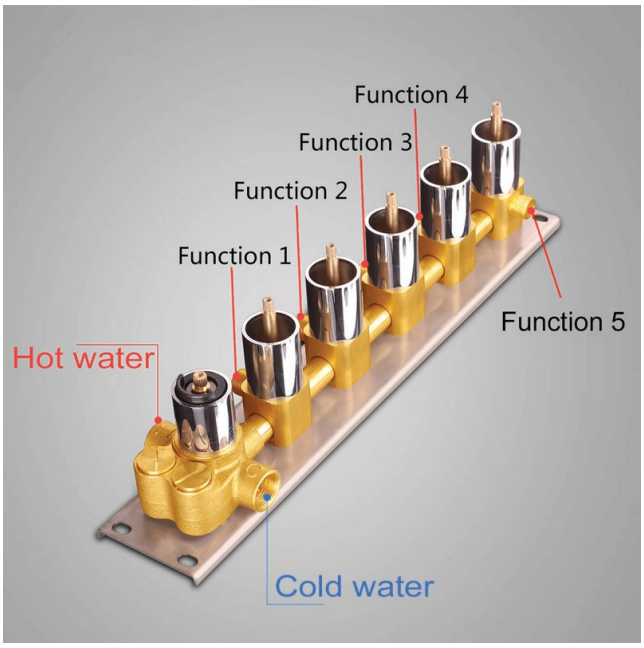

Step 1

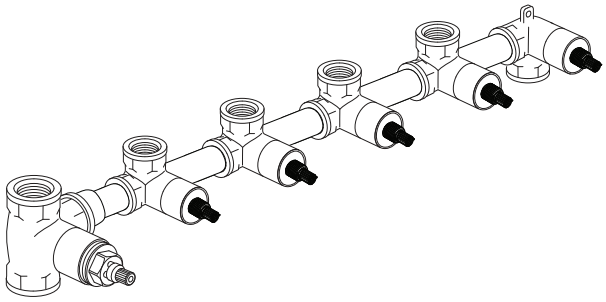

Step 2

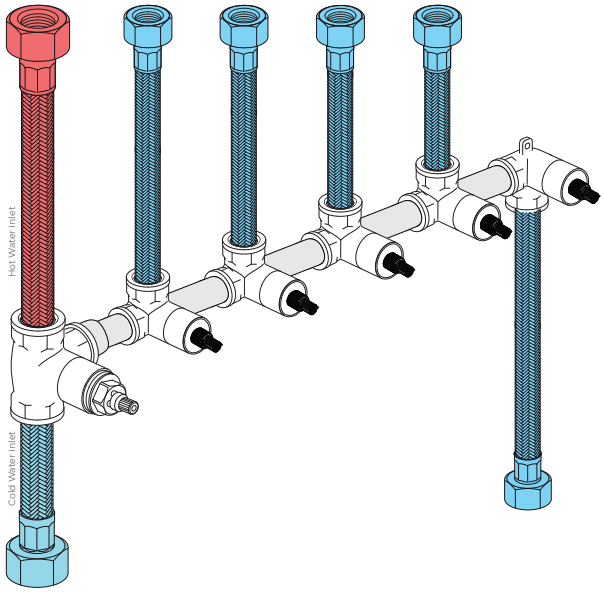

Step 3

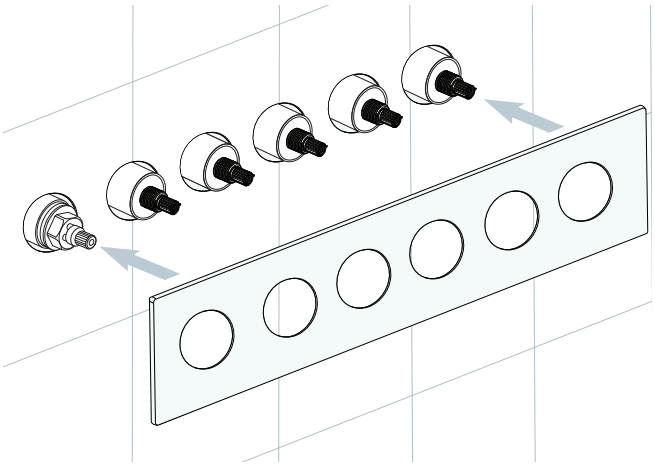

Step 4

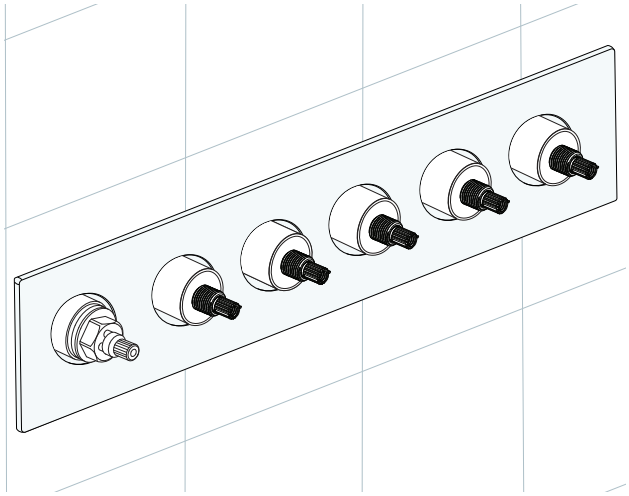

Step 5

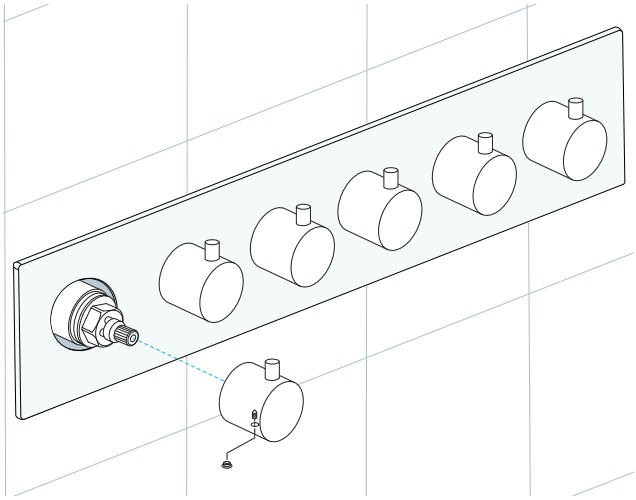

Step 6

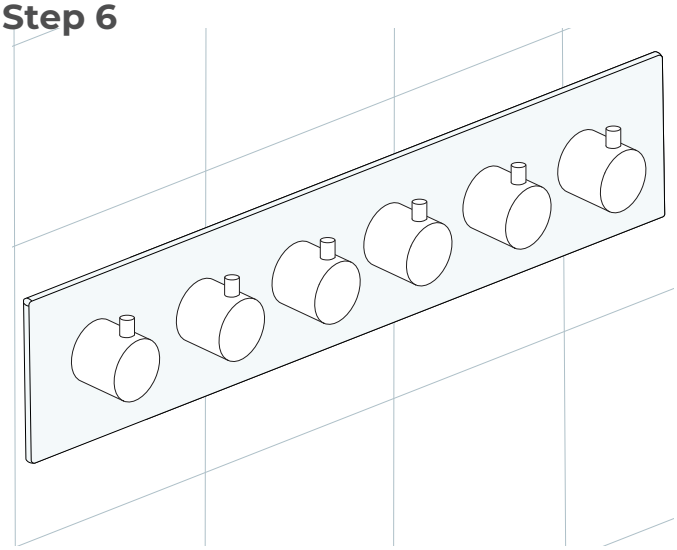

- Release handwheel levers according to the directions.
- Take apart the embed valve, panel, and handwheel.
- Dig the embed space for the pipe on the wall according to the
valve.
- Dig holes according to the position of the screws.
- Use a hammer to thwack the screws into holes.
- Fix the valve body with screws.
- Find out the expansion screw heads with washer and spring washer. Use copper sleeve wrench to lock the screw heads with the embed valve body.
- After connecting all the pipes and before sealing the wall wi
leaking problem occur when you turn on the water.
- Fix the decorative panel on the embedded valve body.
- Screw the handwheel arms with the handwheels

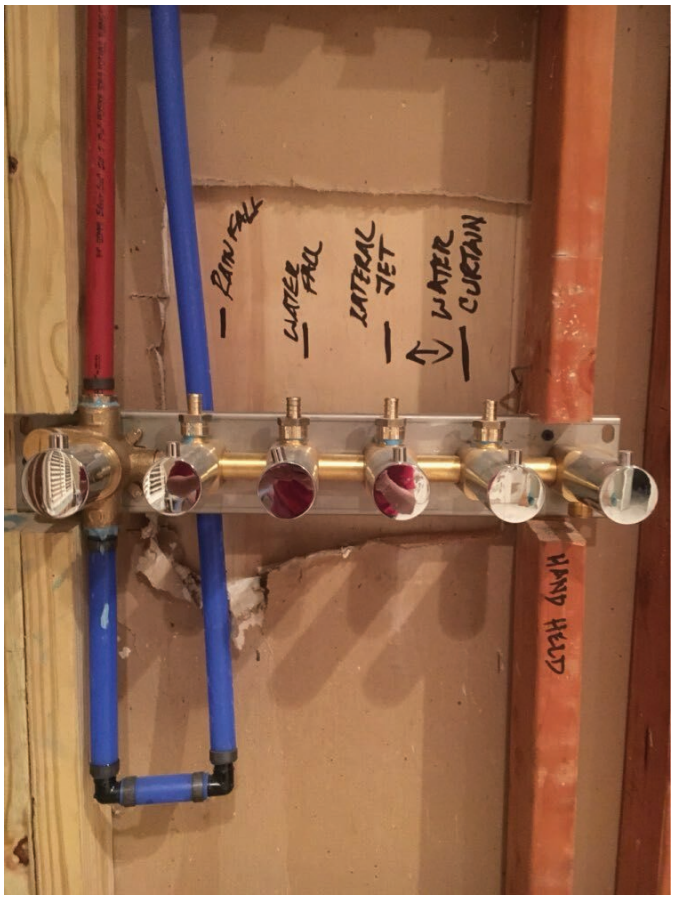

Hand-Held Shower Installations Instructions

Step 1

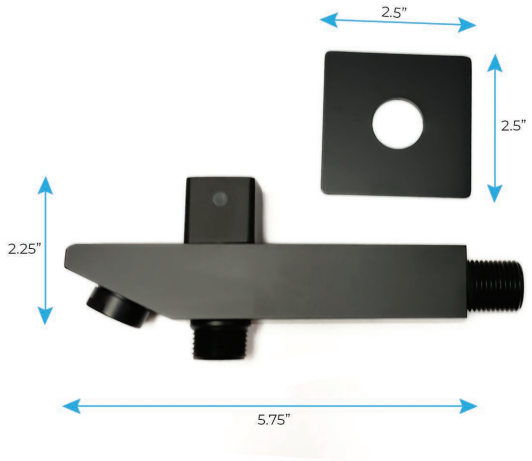

Step 2

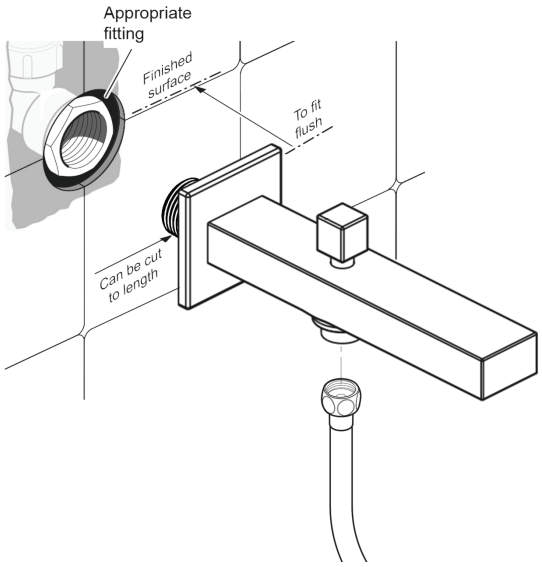

Step 3

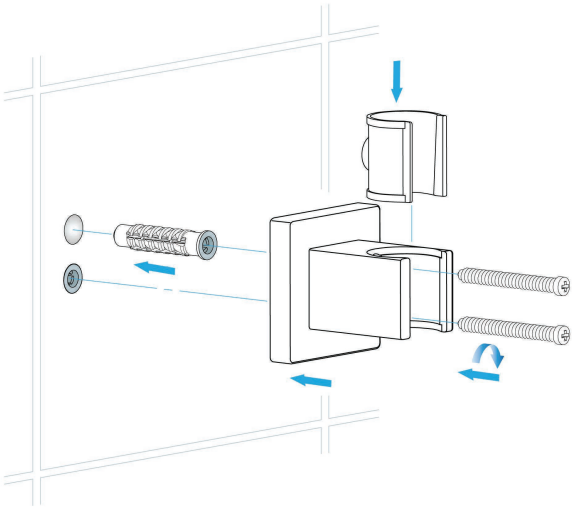

Step 4

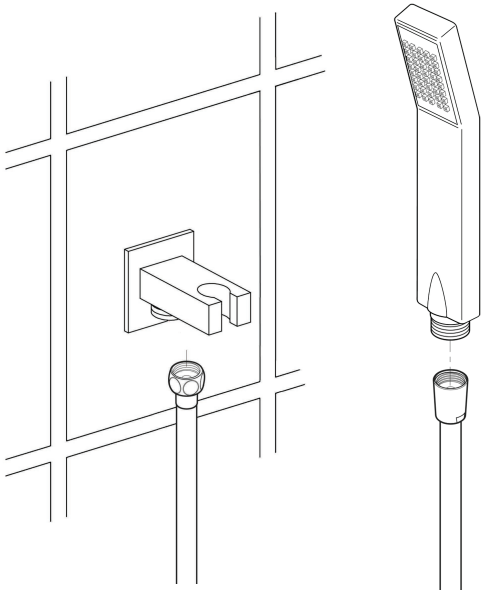

Hand Shower Outlet Installation

• Complete the outlet pipework ensuring it ends in an appropriate 15mm x 1/2" BSP female thread elbow.
Note: This fitting is not supplied as variations in installations require the selection of a suitable solder or compression fitting.

• Install the 'Wall Outlet', thread long male 1/2" BSP into the appropriate female fitting using PTFE tape to give a watertight joint.
Note: The thread can be cut to size if required. Make sure that all debris is removed from the connector and the section that has been cut is dressed correctly, before installation.

The minimum required water pressure is 0.05 MPa (0.5 bar).
Flow rate 2.5 GPM (9.5 LPM).

Body Jets Spray Installations Instruction

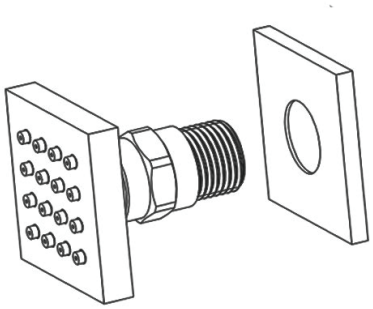

Step 1: Attach the escutcheon to the body spray.

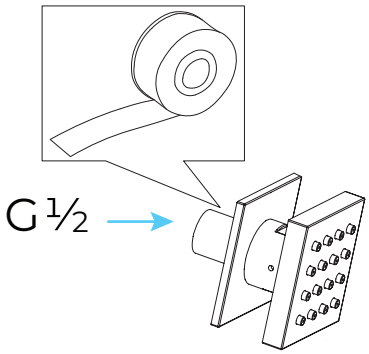

Step 2: Apply teflon tape to threaded tail pipe of the body spray

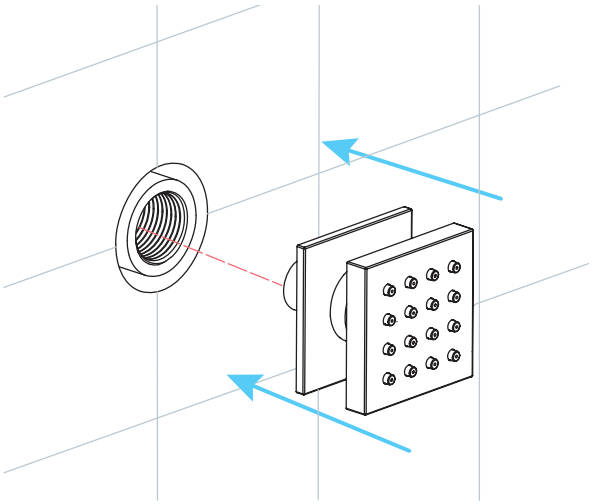

Step 3: Press the escutcheon against the finished wall

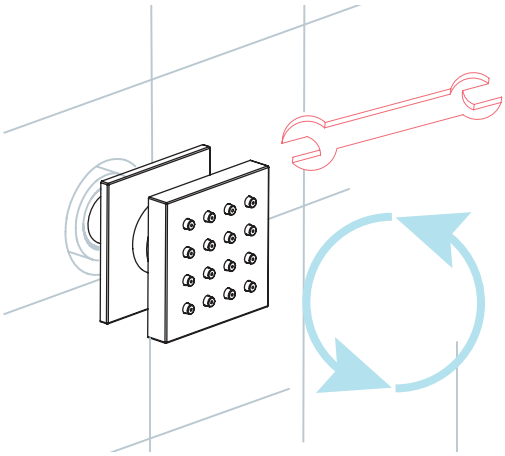

Step 4: Screw the Body spray tightly into the female of water Supply

Pressure Balancing Loop:

. If installing bodysprays in a bank of 3 or fewer, a pressure balancing loop is not necessary.
. If installing bodysprays in a bank of 4 or greater, a pressure balancing loop must be used to keep the pressure even between the bodysprays.

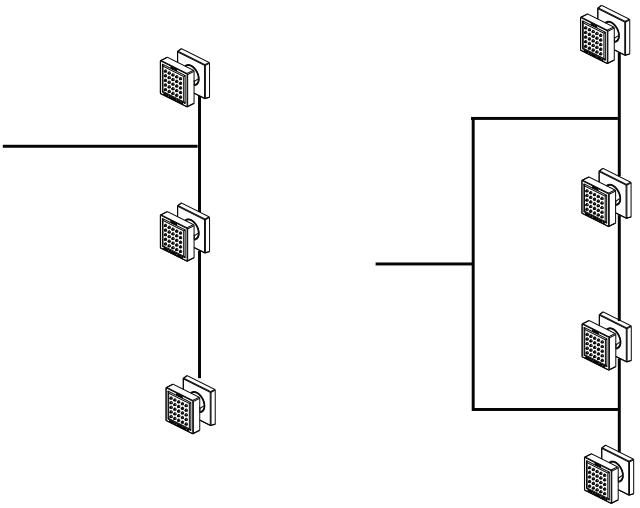

General Information

All products manufactured and supplied by BathSelect are safe and comply to legislative requirements. Providing they are installed correctly and receive regular maintenance in accordance with these instructions your user experience will not be affected

Care & Cleaning
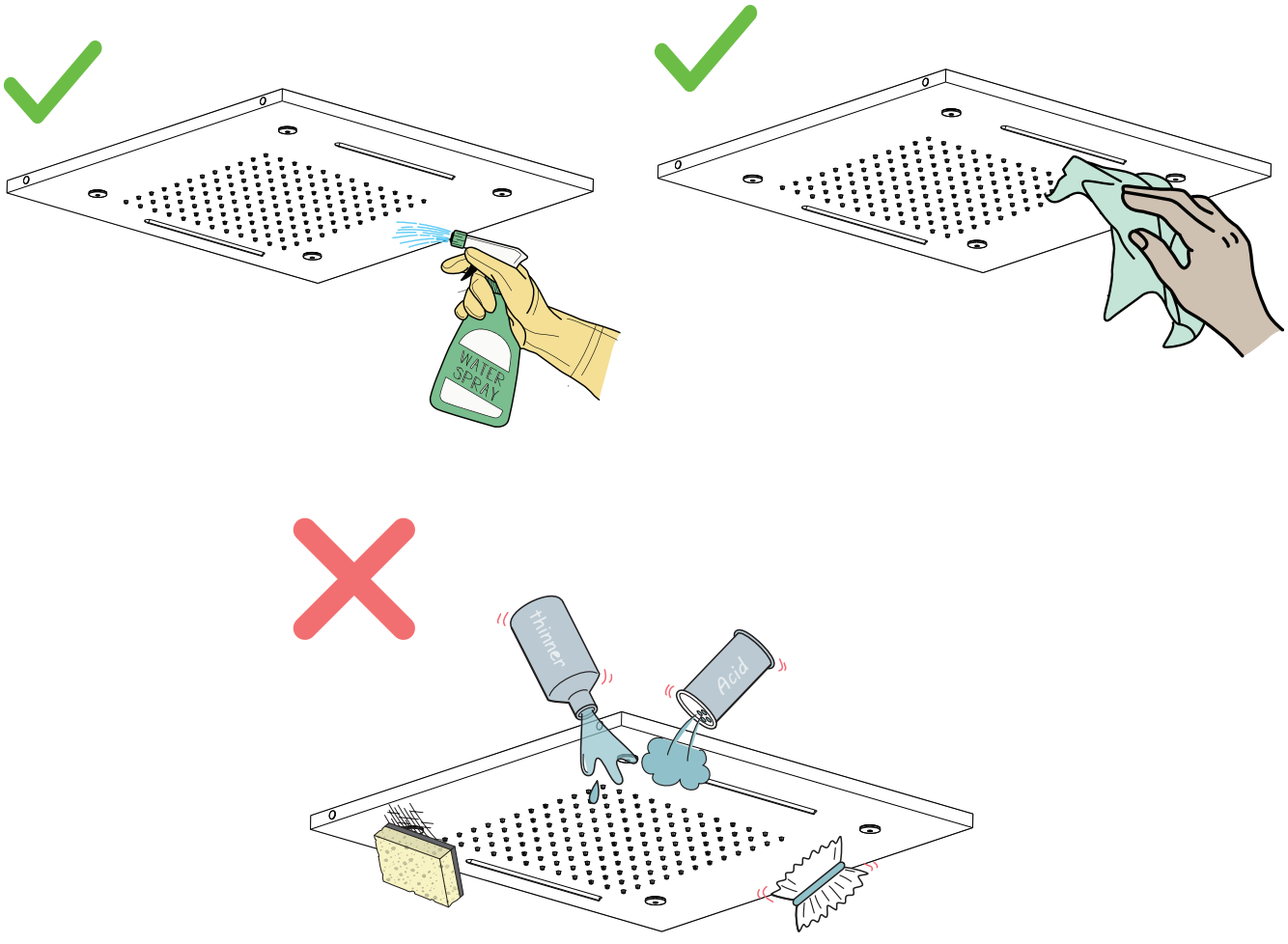
1. The product can be cleaned with warm water, a mild soap and a clean soft cloth.
2. Clean progressively and gently.
3. It is not required to use any abrasive cleaning pads, wire wool or cloths to clean the product.
4. Avoid a vigorous cleaning action, as this could contribute to denaturing and dulling
5. Abrasive or strong cleaning products containing ammonia, bleaches, alcohol, dyes, acids (hydrochloric, formic, phosphorus, chlorine or acetic) will be not be affected.
6. If using a spray cleaner, apply the cleaning agent onto a soft cloth, never directly spray onto the product as the cleaner may enter gaps and openings and cause damage. Do not allow the cleaner to remain on the product for a period of time. After cleaning, rinse thoroughly with clean water.