SOLO TALL TOUCHLESS BRUSHED NICKEL COMMERCIAL AUTOMATIC SENSOR FAUCET INSTALLATION INSTRUCTIONS

BEFORE YOU BEGIN

Before you begin, please read the installation instructions below. Observe all local building and safety codes.

Unpack and inspect the items for any shipping damages. If you find damages, do not install.

Please note all products must be installed by a professional and certified plumber otherwise warranty might be voided.

POSSIBLE TOOLS REQUIRED*

Plumbers Tape

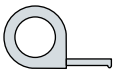
Tape Measure

Level

Adjustable Wrench

Hex Wrench

Thread Sealant

Drill

Pencil or Marker

Screwdriver

*not included

Technical Information

Power: DC:6V(4AA alkaline battery)
AC:220V-240V; 50/60HZ

Water Consumption: 0.05Mpa-0.6Mpa

Detection Zone: 16-32 cm or adjustable

Motor valve lifespan: up to 500000 flushes

Battery lifespan: 100000 cycles

Static Power Consumption: 0.36mw

Working Power consumption: 0.5mw

Inductive Opening Time: < 1 second

Inductive Closing Time: < 2 second

Dia.of inlet / outlet pipe: G1/2"

Flux: ≥0.07L/S

Temperature: 0.1-50°/C

Dia of installing faucet: 33~35mm

Faucet Size

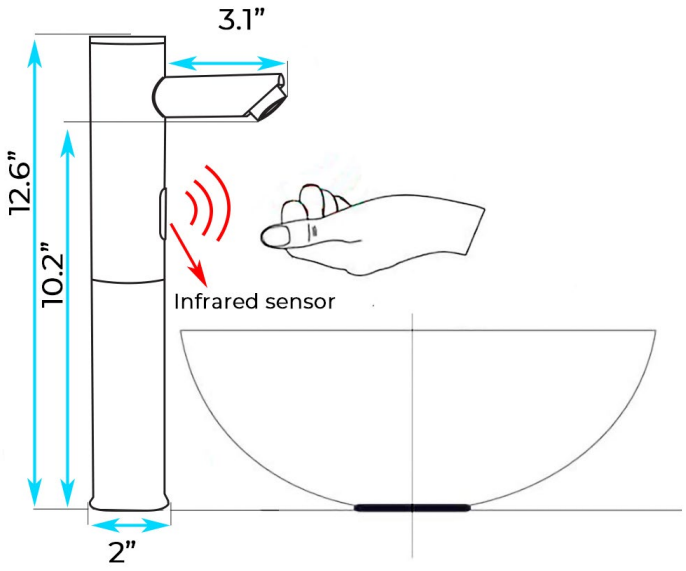

Faucet Deck Mount Installation

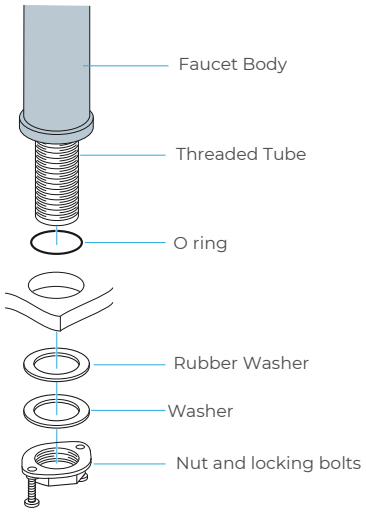

Hole Size Chart

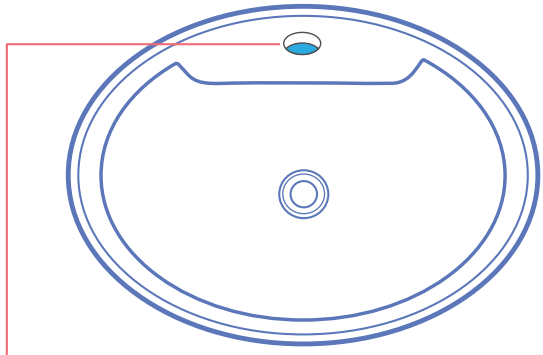

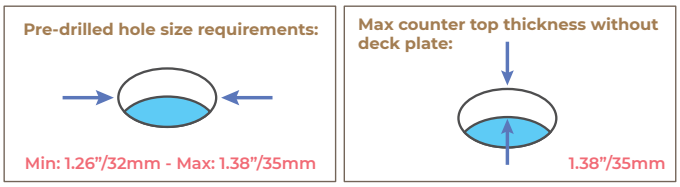

Water Pipe Connection

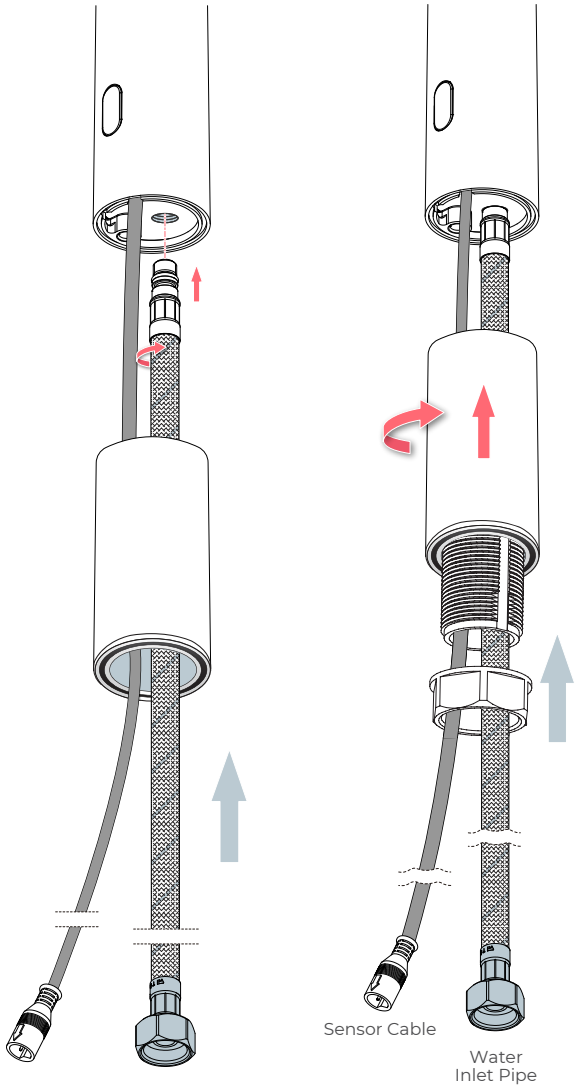

All dimensions and specifications are nominal and may vary. Use actual products for accuracy in critical situations.

Control Box Installation Instructions

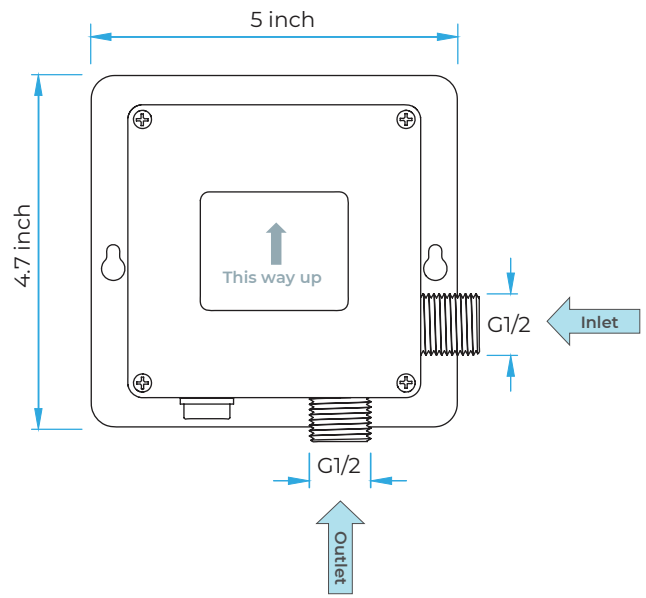

1. Remove Control Box Cover

Remove all four screws in each corner of the control box and remove the cover.

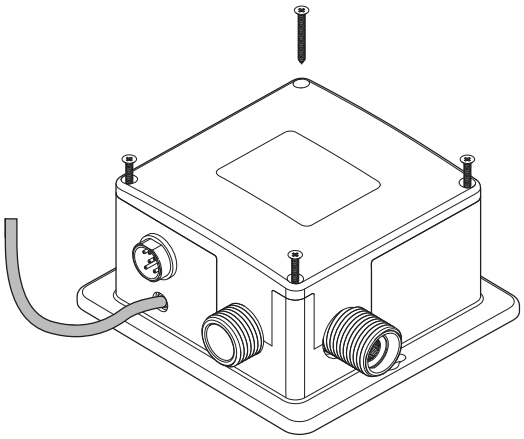

2. Remove Battery Box & Insert Batteries

Remove the battery case from the control box and remove the screw from the center of the battery case. Insert 4 AA batteries (batteries not included) into the battery box ensuring they are inserted the correct way.

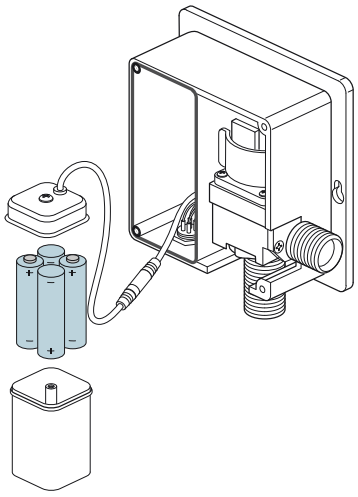

3. Reinstall Battery Box & Control Box Cover

Re-install the battery box cover, matching the alignment arrows together. Set the battery box back into the control box, and re-assemble the control box cover using the previously removed screws ensuring they are all fully tightened.

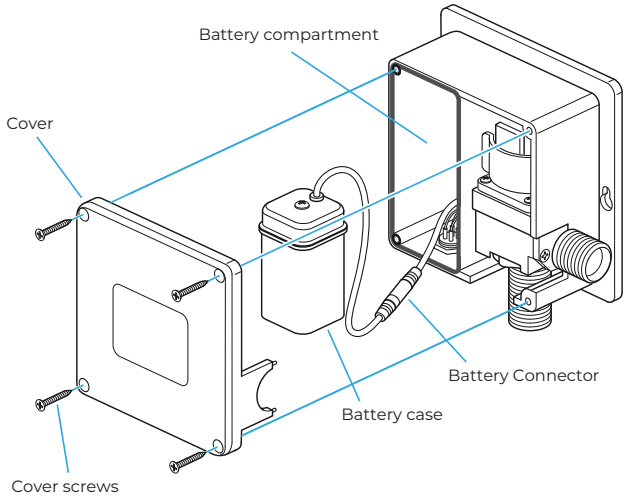

4a. Placement and Mounting Installation

Choose a location under the sink basin to mount the control box, such that the sensor cable, flexible hose, and incoming water supply all connect to the control box. Under the sink basin, drill a hole minimum 3/4" to fit the sensor cable and flexible hose from the spout. Feed the sensor cable and flexible hose through the hole.

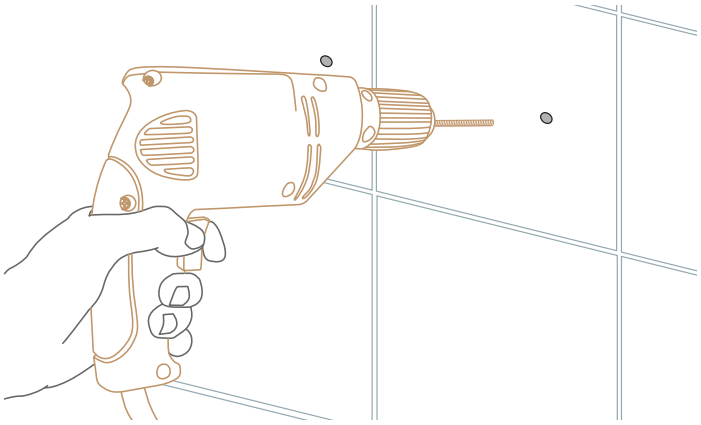

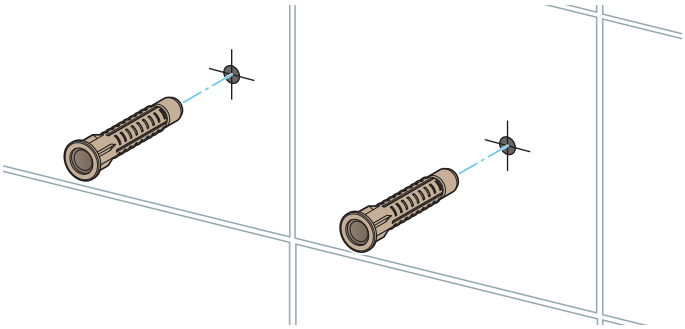

4b. Mount the control box on the wall. Drill two 1/8" (3mm) holes as shown, and push drywall anchors into each hole. Secure the control box to the wall with the drywall screws.

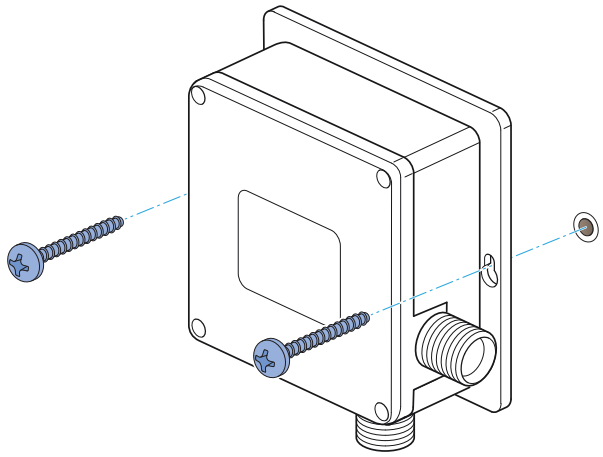

5. Connect The Sensor Cable
Plug the sensor cable from the faucet into the control box to activate the infrared sensor.

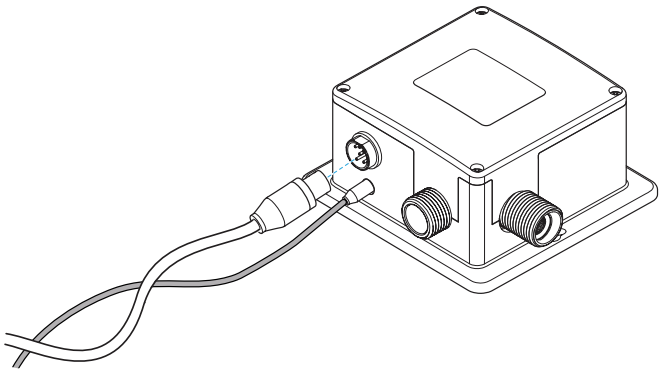

6. Water Pipe Connections
Connect the incoming water supply line to the control box, at the connection marked Inlet. Thread on the swivel nut to the hose by hand. Tighten with a wrench.

Connect the faucet hose to the control box, at the connection marked Outlet.

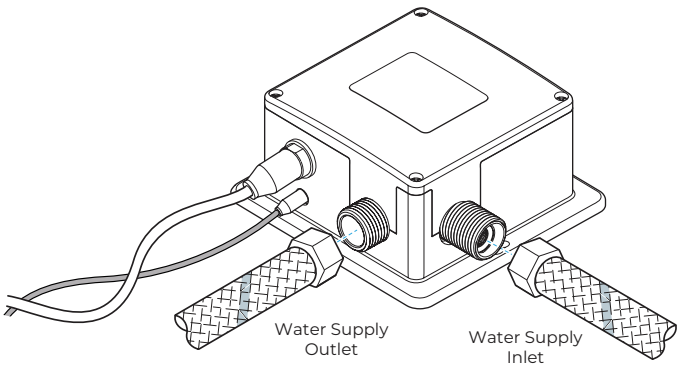

Please wait approximately 60 seconds after connecting the sensor cable for sensor calibration to complete and to begin using the faucet.

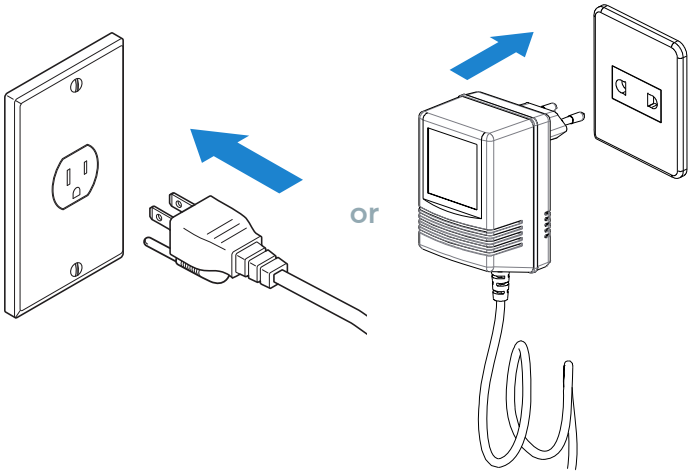

Temp. Control Thermostatic Mixer

Many automatic faucets do not have hot & cold handles to adjust the water temperature coming out of the spout, and normally installed to a single water supply only. This valve is used for automatic faucet to mix hot and cold water and to control water temperature. Normally it would be mounted under the sink with required temperature set.

Working Pressure: 0.05MPa-0.5MPa
Cold Water Temp: 0°C
Hot Water Temp: 85°C
Outlet Flow Rate: 20m³/h

Battery (DC 6V) Only Control Box

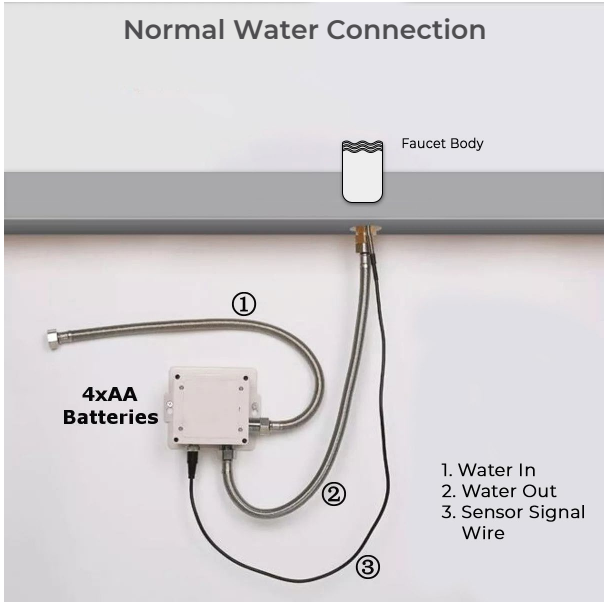

Battery (DC 6V) & AC 220V Control Box

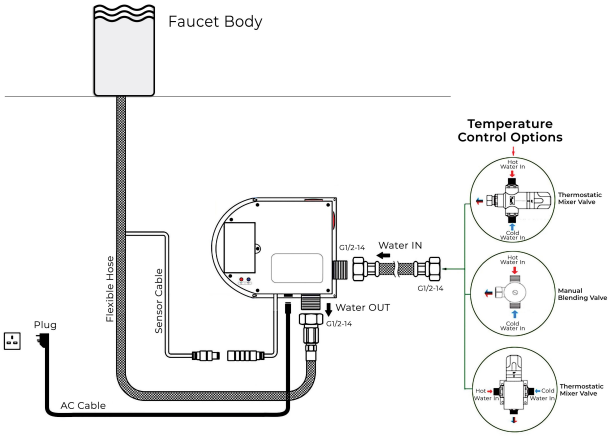

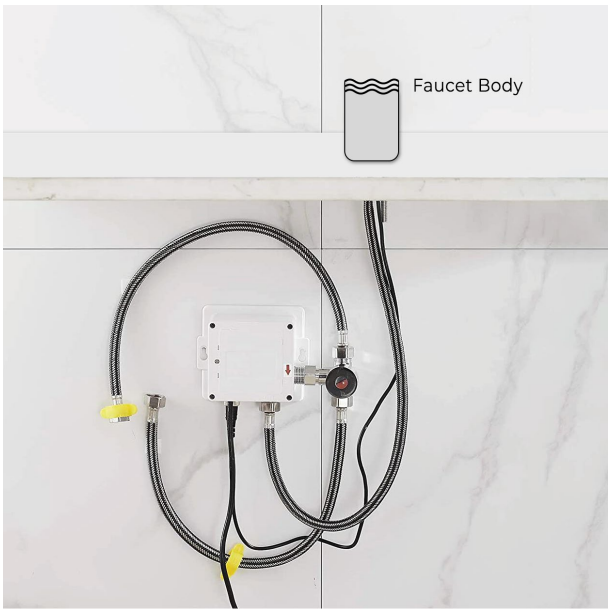

1. Screw the hose into the corresponding screw-hole of the faucet body. Fix the O-ring into the bottom groove of the faucet body.

2. Insert hose, threaded pipe, and sensor cable through the drilled hole of the countertop. Put rubber washer and metal washer onto the threaded pipe, screwing in mounting nut. Adjust the faucet body correctly and tighten the mounting nut with screws.

3. Install the control box to the faucet.

4. Then connect the battery cable to the control box.

5. Make Connections to water supplies. Turn on the water supply and flush water lines into a container for one minute.
Important: This flushes away any debris that could cause damage to faucet internal parts.

6. Connect waterlines to angle stops. Turn on the angle stops and check for leaks (DO NOT TURN FAUCET ON).

7. Turn the faucet on for 1 minute to flush any debris.

Battery Override

In the event of a power failure, the sensor faucet will automatically switch to battery-operated mode to ensure the faucet continues to function. The sensor faucet can also operate on the battery alone if no main power source is available.

Set Water Flow Time-Out

The sensor faucet will shut off the water when washing time exceeds 1.5 minutes. If follow-up washing is needed, re-induce after removing hands for 2 seconds.

Notes

1. Please use the AA type alkaline battery (1.5v for each).

2. Place batteries into each indicated spot. Utilizing new batteries of the same brand is best. If mixed, it could shorten the battery life to 1-2 months.

3. After installation of the battery, the solenoid valve will do its self-testing.

4. Wait ten seconds for power to be applied and allow the sensor faucet to self-adjust sensor distance. Do not use your faucet during this time.

5. If the sensor distance is too short, please move the barrier from the faucet for 5-6 mins and allow the sensor faucet to adjust to normal.

6. If the sensor distance is too far, and water flows continuously, the sensor faucet will self-adjust the distance after 5 mins.

Sensor Range

This sensor faucet can automatically adjust the inductive range within 10 seconds of electrification. Do not use inductor during this period so that the inductor can automatically adjust to a suitable inductive range.

Incorrect Placement

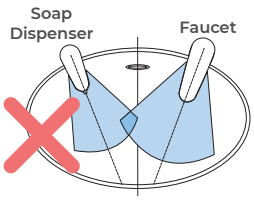

Keep sensor range adjustment within 4 inches away from center of spout. This can only be done with optional remote control.

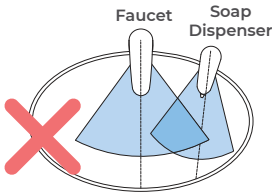

Installing electronic soap dispenser & faucet with intersecting centerline might lead to accidental activation of either or both.

Correct Placement

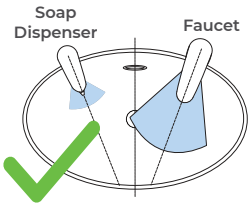

Keep sensor ranges factory preset.

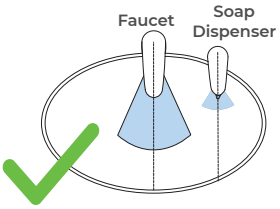

Keep soap spout & faucet centerline parallel.

General Information

Our sensor spouts have a non-touch control which uses infrared sensing technology to detect human presence. Once detected, the spout instantly dispenses water and automatically stops once the user moves their hands away to eliminate unnecessary water wastage, whilst creating a more hygienic washroom solution.

All products manufactured and supplied by BathSelect are safe and comply to legislative requirements. Providing they are installed correctly and receive regular maintenance in accordance with these instructions your user experience will not be affected.

Hygienic

The proximity sensor faucet removes the need to touch the faucet body, reducing the spread of germs and the chance of cross-contamination.